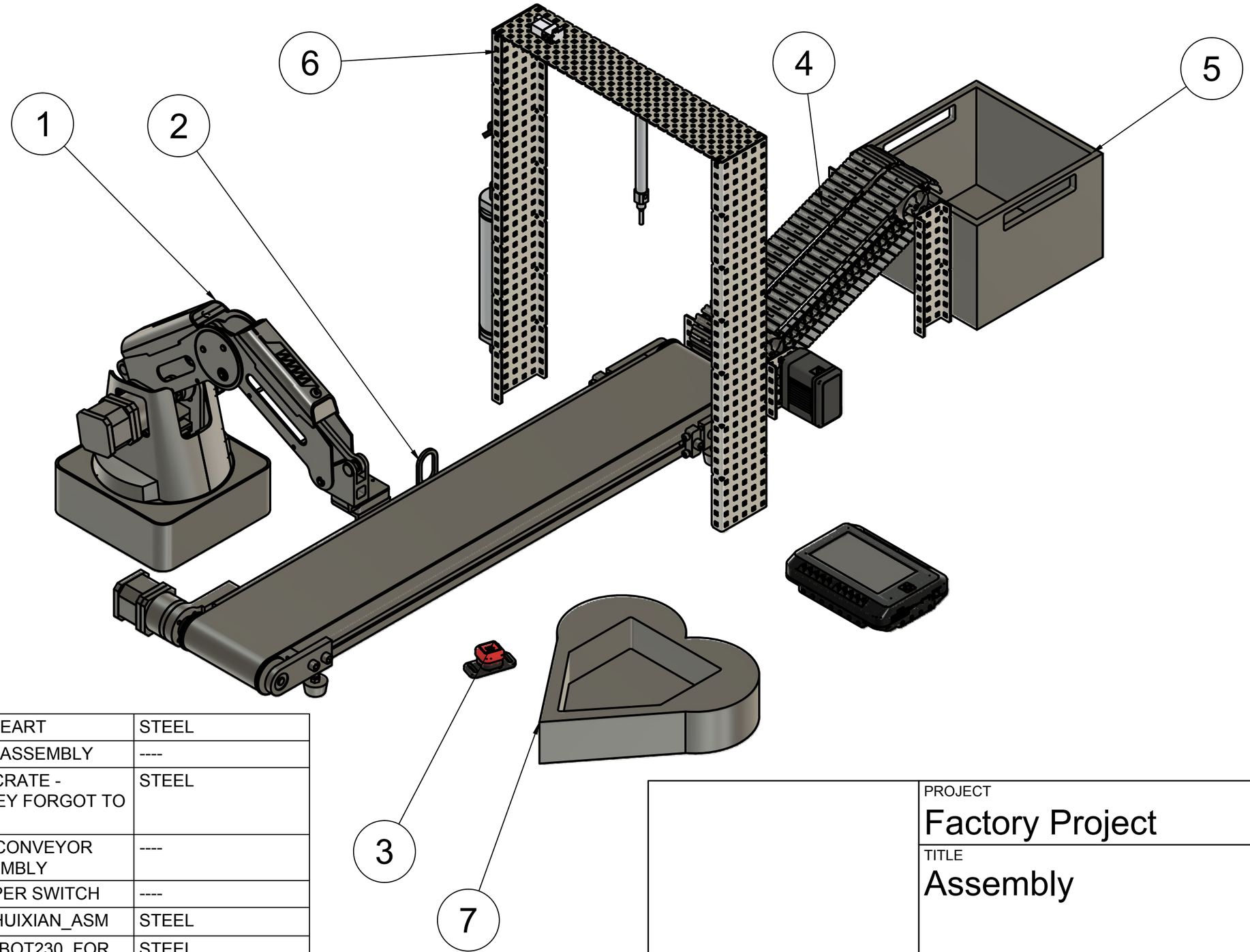

ITEM	QTY	PART NUMBER	MATERIAL
7	1	BIG HEART	STEEL
6	1	FULL ASSEMBLY	----
5	1	XXL CRATE - SIDNEY FORGOT TO SAVE	STEEL
4	1	VEX CONVEYOR ASSEMBLY	----
3	1	BUMPER SWITCH	----
2	1	LIUSHUIXIAN_ASM	STEEL
1	1	0_DOBOT230_FOR_ ASSEMBLY_ASM	STEEL

PARTS LIST

PROJECT
Factory Project

TITLE
Assembly

APPROVED		SIZE	CODE	DWG NO	REV
CHECKED	BIG M	B		1/2	A
DRAWN	Matthew Jeide 2/27/26	SCALE 1:4	WEIGHT	SHEET 1/1	